# RC 5500 SERIES

## Specifications
Stand-Up Rider Lift Truck



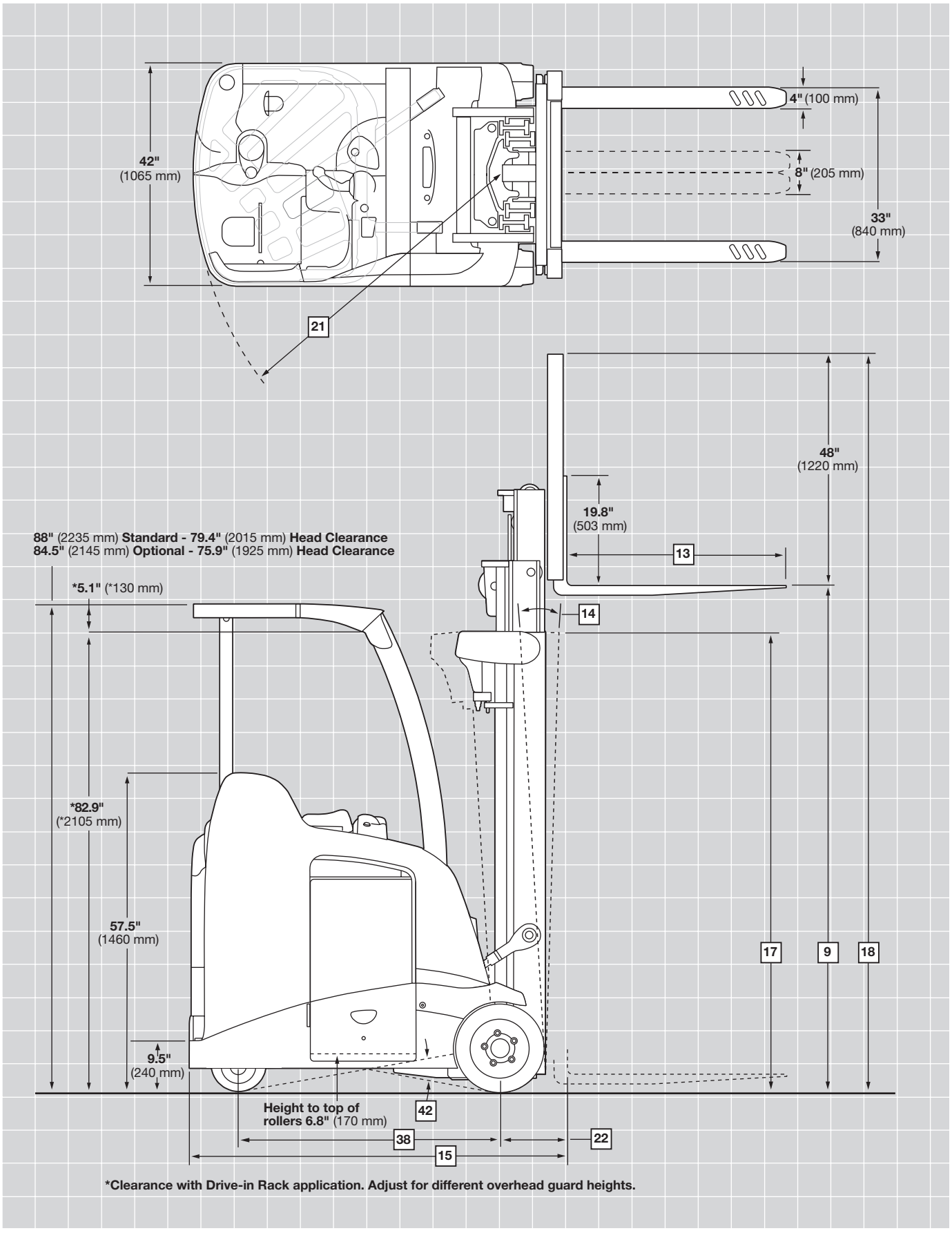


*Clearance with Drive-in Rack application. Adjust for different overhead guard heights.

| | | | | | | *Imperial* | *Metric* | *Imperial* | *Metric* | *Imperial* | *Metric* |
|---|---|---|---|---|---|---|---|---|---|---|---|
| General Information | 1 | **Manufacturer** | | | | **Crown Equipment Corporation** | | | | | |
| | 2 | **Model** | | | RC | 5510/15-30 | | 5520/25-30 | | 5530/35-30 | |
| | 3 | **Load Capacity*** | Rated to 154" (3911 mm) | lb | kg | 3000 | 1360 | 3000 | 1360 | 3000 | 1360 |
| | 4 | **Load Center** | Fork Face to Load CG | in | mm | 24 | 600 | 24 | 600 | 24 | 600 |
| | 5 | **Power** | Electric | | | 36 Volts | | | | | |
| | 6 | **Operator Type** | | | | Stand-up Rider Counterbalanced | | | | | |
| | 7 | **Tire Type** | Press-on Solid | | | Cushion | | | | | |
| | 8 | **Wheels (x = driven)** | Number Front/Rear | | | 2x/2 | | | | | |
| Dimensions | 9 | **Mast** | Lifting Height | in | mm | See Mast Chart | | | | | |
| | 11 | | Free Lift Height† | in | mm | See Mast Chart | | | | | |
| | 12 | **Fork Carriage** | | | | ITA Class II | | | | | |
| | 13 | **Forks** | Standard L x W x T | in | mm | 36x4x1.5 | 915x102x38 | 36x4x1.5 | 915x102x38 | 36x4x1.5 | 915x102x38 |
| | | | Optional Lengths | in | mm | 30, 39, 42, 45, 48, 54, 60 | 760, 990, 1070, 1145, 1220, 1375, 1525 | 30, 39, 42, 45, 48, 54, 60 | 760, 990, 1070, 1145, 1220, 1375, 1525 | 30, 39, 42, 45, 48, 54, 60 | 760, 990, 1070, 1145, 1220, 1375, 1525 |
| | 14 | **Tilt** | B°/F° | | degree | See Mast Chart | | | | | |
| | 15 | **Headlength**** | | | mm | 62.9 | 1598 | 65.2 | 1656 | 67.5 | 1715 |
| | 16 | **Width Overall** | Standard Tread | in | mm | 42.0 | 1067 | 42.0 | 1067 | 42.0 | 1067 |
| | 17 | **Height** | Mast Collapsed | in | mm | See Mast Chart | | | | | |
| | 18 | | Mast Extended† | in | mm | See Mast Chart | | | | | |
| | 21 | **Turning Radius** | | in | mm | 51.7 | 1313 | 54.0 | 1372 | 56.2 | 1427 |
| | 22 | **Load Distance**** | Wheel Cntr to Fork Face | in | mm | 11.3 | 287 | 11.3 | 287 | 11.3 | 287 |
| | 23 | **Aisle Width** | Right Angle Stack | in | mm | Turn Radius + Load Distance + Load Length + Clearance | | | | | |
| Performance | 24 | **Speed Travel** 36V | Empty/Loaded | mph | mm/s | 7.2/7.2 | 11.6/11.6 | 7.2/7.2 | 11.6/11.6 | 7.2/7.2 | 11.6/11.6 |
| | 24a | **w/Productivity Pkg.** 36V | Empty/Loaded | mph | mm/s | 7.8/7.2 | 12.6/11.6 | 7.8/7.2 | 12.6/11.6 | 7.8/7.2 | 12.6/11.6 |
| | 25 | **Speed Lift** DC | Empty/Loaded | fpm | mm/s | 90/60 | 457/305 | 90/60 | 457/305 | 90/60 | 457/305 |
| | | AC | Empty/Loaded | fpm | mm/s | 110/65 | 559/330 | 110/65 | 559/330 | 110/65 | 559/330 |
| | 26 | **Speed Lower** | Empty/Loaded | fpm | mm/s | 90/90 | 457/457 | 90/90 | 457/457 | 90/90 | 457/457 |
| Weight | 32 | **Weight, Less Battery** | | | lb kg | 6350 | 2880 | 6390 | 2900 | 5929 | 2690 |
| | 33 | **Axle Load with Max Battery** | Unloaded Front | | lb kg | 3992 | 1810 | 4167 | 1890 | 4522 | 2050 |
| | 34 | | Unloaded Rear | | lb kg | 4337 | 1970 | 4489 | 2035 | 4057 | 1840 |
| Chassis | 35 | **Tires** | Number Front/Rear | | | 2/2 | | | | | |
| | 36 | | Size Front | in | mm | 16x7x10.5 | 406x178x267 | 16x7x10.5 | 406x178x267 | 16x7x10.5 | 406x178x267 |
| | 37 | | Size Rear | in | mm | 10x5x6.5 | 254x127x165 | 10x5x6.5 | 254x127x165 | 10x5x6.5 | 254x127x165 |
| | 38 | **Wheelbase** | | in | mm | 42.7 | 1085 | 45.0 | 1143 | 47.2 | 1198 |
| | 39 | **Tread Width** | Front - Drive | in | mm | 35.0 | 889 | 35.0 | 889 | 35.0 | 889 |
| | | | Rear - Steer | in | mm | 6.7 | 170 | 6.7 | 170 | 6.7 | 170 |
| | 40 | **Ground Clearance, Loaded** | Lowest Point | in | mm | 3.0 | 76 | 3.0 | 76 | 3.0 | 76 |
| | 41 | | Center of Wheelbase | in | mm | 4.2 | 107 | 4.2 | 107 | 4.2 | 107 |
| | 42 | **Grade Clearance, Loaded** | | | % | 41 | | 39 | | 37 | |
| | 43 | **Brakes** | Service | | | Foot - Motor | | | | | |
| | 44 | | Parking | | | Auto - Electric | | | | | |
| Battery | 45 | **Battery** | Type | | | Lead Acid | | | | | |
| | | | Compartment | | | B | | C | | D | |
| | 46 | | Capacity | | AH | 775 | | 930 | | 1085 | |
| | | | | | kWh | 27.2 | | 32.6 | | 38.1 | |
| | 47 | | Weight - Min | | lb kg | 1710 | 780 | 1990 | 905 | 2280 | 1035 |
| | | | Weight - Max | | lb kg | 1980 | 895 | 2270 | 1025 | 2650 | 1200 |
| | | | Comp't. Size - Max | | Length | 13.6 | 350 | 15.9 | 410 | 18.1 | 465 |
| | | | | | Width | 38.56 | 979 | 38.56 | 979 | 38.56 | 979 |
| | | | | | Height | 31 | 787 | 31 | 787 | 31 | 787 |
| | | **Cable Lead Length** | Connector Position | in | mm | 12/A | 300/A | 12/A | 300/A | 12/A | 300/A |
| | 48 | **Battery Floor Height** | With Rollers | in | mm | 6.8 | 170 | 6.8 | 170 | 6.8 | 170 |
| Motors | 49 | **Motors** | Traction Motor, dia | in | mm | 7.5 | 191 | 7.5 | 191 | 7.5 | 191 |
| | 50 | | Lift Motor, dia DC/AC | in | mm | 6.7/7.5 | 170/191 | 6.7/7.5 | 170/191 | 6.7/7.5 | 170/191 |
| | 51 | **Operating Pressure** | For Attachments | | psi bar | Up to 2500 | Up to 175 | Up to 2500 | Up to 175 | Up to 2500 | Up to 175 |

* Optional masts, attachments, longer load dimensions and higher lifting heights may result in derating of the capacity. Contact your local dealer.
** Add 4.25" (108 mm) for quad masts; add 2" (51 mm) for sideshift option.
† Includes load backrest.

Performance specifications are based on a truck equipped with a 190" (4825 mm) triple telescopic mast.

| | | | | | *Imperial* | *Metric* | *Imperial* | *Metric* | *Imperial* | *Metric* |
|---|---|---|---|---|---|---|---|---|---|---|
| General Information | 1 | **Manufacturer** | | | **Crown Equipment Corporation** | | | | | |
| | 2 | **Model** | | RC | 5530/35-35 | | 5540/45-40 | | 5555-40 | |
| | 3 | **Load Capacity*** | Rated to 154" (3911 mm) | lb kg | 3500 | 1600 | 4000 | 1800 | 4000 | 1800 |
| | 4 | **Load Center** | Fork Face to Load CG | in mm | 24 | 600 | 24 | 600 | 24 | 600 |
| | 5 | **Power** | Electric | | 36 Volts | | | | | |
| | 6 | **Operator Type** | | | Stand-up Rider Counterbalanced | | | | | |
| | 7 | **Tire Type** | Press-on Solid | | Cushion | | | | | |
| | 8 | **Wheels (x = driven)** | Number Front/Rear | | 2x/2 | | | | | |
| Dimensions | 9 | **Mast** | Lifting Height | in mm | See Mast Chart | | | | | |
| | 11 | | Free Lift Height† | in mm | See Mast Chart | | | | | |
| | 12 | **Fork Carriage** | | | ITA Class II | | | | | |
| | 13 | **Forks** | Standard L x W x T | in mm | 36x4x1.75 | 915x102x45 | 36x4x1.75 | 915x102x45 | 36x4x1.75 | 915x102x45 |
| | | | Optional Lengths | in mm | 30, 39, 42, 45, 48, 54, 60 | 760, 990, 1065, 1145, 1220, 1370, 1525 | 30, 39, 42, 45, 48, 54, 60 | 760, 990, 1065, 1145, 1220, 1370, 1525 | 30, 39, 42, 45, 48, 54, 60 | 760, 990, 1065, 1145, 1220, 1370, 1525 |
| | 14 | **Tilt** | B°/F° | degree | See Mast Chart | | | | | |
| | 15 | **Headlength**** | | in mm | 67.7 | 1720 | 70.1 | 1781 | 74.4 | 1889 |
| | 16 | **Width Overall** | Standard Tread | in mm | 42.0 | 1067 | 42.0 | 1067 | 42.0 | 1067 |
| | 17 | **Height** | Mast Collapsed | in mm | See Mast Chart | | | | | |
| | 18 | | Mast Extended† | in mm | See Mast Chart | | | | | |
| | 21 | **Turning Radius** | | in mm | 56.2 | 1427 | 58.6 | 1488 | 62.8 | 1596 |
| | 22 | **Load Distance**** | Wheel Cntr to Fork Face | in mm | 11.5 | 292 | 11.5 | 292 | 11.5 | 292 |
| | 23 | **Aisle Width** | Right Angle Stack | in mm | Turn Radius + Load Distance + Load Length + Clearance | | | | | |
| Performance | 24 | **Speed Travel** 36V | Empty/Loaded | mph mm/s | 7.2/7.2 | 11.6/11.6 | 7.2/7.2 | 11.6/11.6 | 7.2/7.2 | 11.6/11.6 |
| | 24a | **w/Productivity Pkg.** 36V | Empty/Loaded | mph mm/s | 7.8/7.2 | 12.6/11.6 | 7.8/7.2 | 12.6/11.6 | 7.8/7.2 | 12.6/11.6 |
| | 25 | **Speed Lift** DC | Empty/Loaded | fpm mm/s | 90/57 | 457/290 | 90/50 | 457/250 | na | na |
| | | AC | Empty/Loaded | fpm mm/s | 110/60 | 559/305 | 110/55 | 559/280 | 110/55 | 559/280 |
| | 26 | **Speed Lower** | Empty/Loaded | fpm mm/s | 90/90 | 457/457 | 90/90 | 457/457 | 90/90 | 457/457 |
| Weight | 32 | **Weight, Less Battery** | | lb kg | 6429 | 2915 | 6457 | 2930 | 7975 | 3615 |
| | 33 | **Axle Load with Max Battery** | Unloaded Front | lb kg | 4557 | 2065 | 4850 | 2200 | 5897 | 2675 |
| | 34 | | Unloaded Rear | lb kg | 4521 | 2050 | 4678 | 2120 | 5528 | 2505 |
| Chassis | 35 | **Tires** | Number Front/Rear | | 2/2 | | | | | |
| | 36 | | Size Front | in mm | 16x7x10.5 | 406x178x267 | 16x7x10.5 | 406x178x267 | 16x7x10.5 | 406x178x267 |
| | 37 | | Size Rear | in mm | 10x5x6.5 | 254x127x165 | 10x5x6.5 | 254x127x165 | 10x5x6.5 | 254x127x165 |
| | 38 | **Wheelbase** | | in mm | 47.2 | 1198 | 49.6 | 1260 | 53.9 | 1368 |
| | 39 | **Tread Width** | Front - Drive | in mm | 35.0 | 889 | 35.0 | 889 | 35 | 889 |
| | | | Rear - Steer | in mm | 6.7 | 170 | 6.7 | 170 | 6.7 | 170 |
| | 40 | **Ground Clearance, Loaded** | Lowest Point | in mm | 3.0 | 76 | 3.0 | 76 | 3.0 | 76 |
| | 41 | | Center of Wheelbase | in mm | 4.2 | 107 | 4.2 | 107 | 4.2 | 107 |
| | 42 | **Grade Clearance, Loaded** | | % | 37 | | 35 | | 31 | |
| | 43 | **Brakes** | Service | | Foot - Motor | | | | | |
| | 44 | | Parking | | Auto - Electric | | | | | |
| Battery | 45 | **Battery** | Type | | Lead Acid | | | | | |
| | | | Compartment | | D | | E | | F | |
| | 46 | | Capacity | AH | 1085 | | 1240 | | 1395 | |
| | | | | kWh | 38.1 | | 43.6 | | 48.5 | |
| | 47 | | Weight - Min | lb kg | 2280 | 1035 | 2600 | 1180 | 3100 | 1410 |
| | | | Weight - Max | lb kg | 2650 | 1200 | 3070 | 1390 | 3450 | 1560 |
| | | | Comp't. Size - Max | Length | 18.1 | 465 | 20.5 | 525 | 22.8 | 580 |
| | | | | Width | 38.56 | 979 | 38.56 | 979 | 38.56 | 979 |
| | | | | Height | 31 | 787 | 31 | 787 | 31 | 787 |
| | | **Cable Lead Length** | Connector Position | in mm | 12/A | 300/A | 12/A | 300/A | 12/A | 300/A |
| | 48 | **Battery Floor Height** | With Rollers | in mm | 6.8 | 170 | 6.8 | 170 | 6.8 | 170 |
| Motors | 49 | **Motors** | Traction Motor, dia | in mm | 7.5 | 191 | 7.5 | 191 | 7.5 | 191 |
| | 50 | | Lift Motor, dia DC/AC | in mm | 6.7/7.5 | 170/191 | 6.7/7.5 | 170/191 | 6.7/7.5 | 170/191 |
| | 51 | **Operating Pressure** | For Attachments | psi bar | Up to 2500 | Up to 175 | Up to 2500 | Up to 175 | Up to 2500 | Up to 175 |

* Optional masts, attachments, longer load dimensions and higher lifting heights may result in derating of the capacity. Contact your local dealer.
** Add 4.25" (108 mm) for quad masts; add 2" (51 mm) for sideshift option.
† Includes load backrest.

Performance specifications are based on a truck equipped with a 190" (4825 mm) triple telescopic mast.

| Dimensions | Mast Chart RC 5500 Series | | TT | | | | | | | | | |
|---|---|---|---|---|---|---|---|---|---|---|---|---|
| | | | in | mm | in | mm | in | mm | in | mm | in | mm |
| | 9 | **Lifting Height** | 154 | 3910 | 190 | 4825 | 208 | 5280 | 226 | 5740 | 244 | 6200 |
| | 11 | **Free Lift Height** | 20.2 | 510 | 32.2 | 815 | 38.2 | 970 | 44.2 | 1120 | 50.2 | 1275 |
| | 14 | **Tilt B/F* (degree)** | 3/5 | 3/5 | 5/5 | 5/5 | 5/5 | 5/5 | 5/5 | 5/5 | 5/5 | 5/5 |
| | 17 | **Mast Collapsed Height** | 71.3 | 1815 | 83.3 | 2115 | 89.3 | 2265 | 95.3 | 2415 | 101.3 | 2565 |
| | 18 | **Mast Extended Height** | 202 | 5135 | 238 | 6045 | 256 | 6505 | 274 | 6960 | 292 | 7420 |

| Dimensions | Mast Chart RC 5500 Series | | QUAD | | | | | | | | | |
|---|---|---|---|---|---|---|---|---|---|---|---|---|
| | | | in | mm | in | mm | in | mm | in | mm | in | mm |
| | 9 | **Lifting Height** | 240 | 6095 | 246 | 6245 | 258 | 6550 | 264 | 6705 | 276 | 7010 |
| | 11 | **Free Lift Height** | 33.2 | 840 | 36.2 | 915 | 39.2 | 995 | 42.2 | 1070 | 45.2 | 1145 |
| | 14 | **Tilt B/F* (degree)** | 3/5 | 3/5 | 3/5 | 3/5 | 3/5 | 3/5 | 3/5 | 3/5 | 3/5 | 3/5 |
| | 17 | **Mast Collapsed Height** | 83.4 | 2120 | 86.4 | 2195 | 89.4 | 2275 | 92.4 | 2350 | 95.4 | 2425 |
| | 18 | **Mast Extended Height** | 288 | 7315 | 294 | 7470 | 306 | 7775 | 312 | 7925 | 324 | 8230 |

All values with 48" (1220 mm) load backrest
*Forward tilt limited to 2º above staging



### Standard Equipment

1. Crown's Access 1 2 3® Comprehensive System Control
2. e-GEN® Braking System with automatic parking brake
3. Intrinsic Stability System®
   - Travel speed reduction and appropriate brake control when forks are above free lift
   - Forward tilt interlock above staging
   - Controlled tilt speeds
   - Counterweight exceeds required standards
   - Cornering speed control
   - Ramp hold
   - Ramp speed control
4. FlexRide® Suspension
5. Operator compartment
   - Crown flexible side stance
   - Padded back support with integral side restraint
   - Premium rubber floor mat
   - Padded arm rest
   - Operator console with desk top work surface and storage
   - Entry bar
   - Posture relief step
6. Multi-task control handle
7. Tilt position assist
8. Crown display
   - Battery discharge indicator with lift interrupt and re-key feature
   - Hour meters / travel distance / stop watch
   - Pin code access capable
   - Event code display with five (5) key navigation
   - Access 1 2 3 diagnostics
   - P1, P2, P3 Performance tuning
9. AC traction system
10. 36-volt system
11. 350 amp battery connector
12. InfoPoint® System with Quick Reference Guide
13. Color-coded wiring
14. Battery rollers
15. Dual 10" (254 mm) cushion steer tires
16. Large 16" (406 mm) cushion drive tires
17. Crown-manufactured drive and lift motors
18. High visibility power unit
19. Radial design overhead guard with third post
20. High visibility mast with in-line hose routing
21. Hydrostatic power steering
22. 5° forward tilt
23. 48" (1220 mm) high load backrest
24. Reverse steering
25. Drive axle debris guard

### Optional Equipment

1. AC Hydraulics
2. Productivity package
3. Operator compartment wall padding
4. Adjustable armrest
5. Freezer and corrosion conditioning
6. Sideshifter
7. Quick disconnect hydraulic connectors
8. Forward steering
9. EE rating
10. InfoLink® Ready System
11. Keyless on/off switch
12. Fork lengths
13. Polished and tapered forks
14. Load backrest heights
15. Non-marking smooth or lug rubber tires
16. Drive-in rack overhead guard
17. Overhead guard heights
18. Tilt options
19. Work lights
20. Strobe lights
21. Audible travel alarms
22. Suspended floorboard
23. Positive/Negative accessory cable
24. Work Assist® Accessories
    - Clip pad and hook
    - Clamp
    - Clamp and mounting plate
    - Operator fan
    - Fire extinguisher
    - Dome light
    - Storage pocket
25. LED worklights with plastic lenses

### Operator Compartment

Soft, rounded surfaces make the compartment interior more comfortable. Streamlined exterior smooths entry/exit for the operator.

A low floor height, (9.5" [240 mm]) first greets the operator. A patented FlexRide suspended floor provides a comfortable ride for a wide range of operators. A footrest provides postural relief during stationary tasks, complementing the largest floorboard in its class.

Crown's flexible side stance allows the operator to change positions to increase comfort and productivity.

An entry bar with sensors automatically slows travel and sounds an audible alarm when activated, encouraging safe foot positioning inside the truck.

The Multi-Task Control Handle naturally bridges Crown's current and past designs. Intuitive operation is increased, reducing the learning curve. Blending of hydraulic control functions and traction can improve productivity. Control handle activation forces are reduced. Soft grip steer tiller with hydrostatic steering reduces operator fatigue.

Operator visibility is improved with:

- Low-profile sculpted power unit
- High visibility mast
- Angled overhead guard post and placement
- Radial design overhead guard
- Flexible side stance

**Crown Drive System**
Crown has applied the latest generation AC drive system, enhanced with Access 1 2 3® technology. The demand for high efficiency systems that closely match customer torque requirements is met with this generation control system. Crown-manufactured, independently controlled, AC drive motors are specifically designed to optimize system integration between the traction and braking controls.

Crown's Access 1 2 3 technology provides optimum performance and control by offering a communication interface for operators and technicians, intelligent coordination of lift truck system and simplified service with advanced diagnostics.

The Crown display is used for easy troubleshooting, access service history and set performance features. A distribution panel is conveniently located with all test points, control fuses and central wiring for easy troubleshooting.

Three modes of performance can be selected to accommodate operator experience or application requirements.

**e-GEN® Braking System**
Variable regenerative motor braking is optimized and virtually eliminates brake maintenance. The appropriate amount of stopping force is applied to match operator brake input and the current operating conditions of the truck.

The closed loop Access 1 2 3 traction control will keep the truck static until a travel input is requested, even when operating on a grade.

Automatic electric parking brakes activate when the operator releases the brake pedal, a travel input has not been requested or battery power has been disconnected.

**Steering**
Load-sense hydrostatic steering is an on-demand system which reduces energy consumption. Smooth, quiet steering control with minimal operator effort required at the steer tiller. Steer tires rotate 182° for maximum maneuverability. Crown's hydrostatic steering system is simplified with significantly fewer parts, thus reducing maintenance requirements.

**Hydraulics**
The hydraulic system provides continuous filtration. A pressurized steel hydraulic tank reduces oil misting and contamination. Hydraulic attachments can be added easily in the field.

Hydraulic manifold is mounted on the mast reducing the number of hoses and fittings.

Ram displacement type lift cylinders and two double acting tilt cylinders are Crown-manufactured. All rams and piston rods are hard chrome plated to reduce pitting and extend cylinder packing life. O-ring face seal fittings are used to eliminate leaks.

**Mast Assembly**
Crown-manufactured mast assembly utilizes a "flush-face" interlocked I-beam design to improve visibility and reduce truck length. Roller bearing studs are welded on both sides of the rails for maximum strength and roller bearings are canted to run in the thick cross section of the rail. Tie bars wrap around the rails for added strength and to resist off-center load forces.

"In-line" hose routing opens up visibility. Cylinders are placed to the sides to create a high visibility design.

The mast has four points of attachment to the truck for good load force distribution. Two mounting points are at the frame, where tilt cylinders attach. Tilt cylinders use spherical bushings to resist off center load distortions. Two large diameter studs secure the mast to the drive units.

**Drive Units**
Two Crown-manufactured independent double reduction planetary gear drives offer 27 to 1 gear reduction. The first and second reduction use helical gears for low noise and efficiency. The drive unit gears are splash lubricated in an oil bath.

**Carriage**
An ITA Class II carriage is standard. An optional hook type ITA sideshifter or other attachments are easily added. Optional fork lengths are available.

**Other Options**
1. Audible travel alarm
2. Flashing lights

Safety considerations and dangers associated with audible travel alarms and flashing lights include:

- Multiple alarms and/or lights can cause confusion.
- Workers ignore the alarms and/or lights after day-in and day-out exposure.
- Operator may transfer the responsibility for "looking out" to the pedestrians.
- Annoys operators and pedestrians.

**Other Options Available**
Contact your local Crown dealer.

*Dimensions and performance data given may vary due to manufacturing tolerances. Performance is based on an average size vehicle and is affected by weight, condition of truck, how it is equipped and the conditions of the operating area. Crown products and specifications are subject to change without notice.*

**Crown Equipment Corporation**
New Bremen, Ohio 45869 USA
**Tel** 419-629-2311
**Fax** 419-629-3796
crown.com

Because Crown is continually improving its products, specifications are subject to change without notice.

Notice: Not all products and product features are available in all countries in which this literature is published.

Crown, the Crown logo, the color beige, the Momentum symbol, Access 1 2 3, InfoLink, InfoPoint, e-GEN, FlexRide, Intrinsic Stability System and Work Assist are trademarks of Crown Equipment Corporationin the United States and other countries.

Copyright 2007-2018 Crown Equipment Corporation
SF14737-EM Rev. 02-18
Printed in U.S.A.